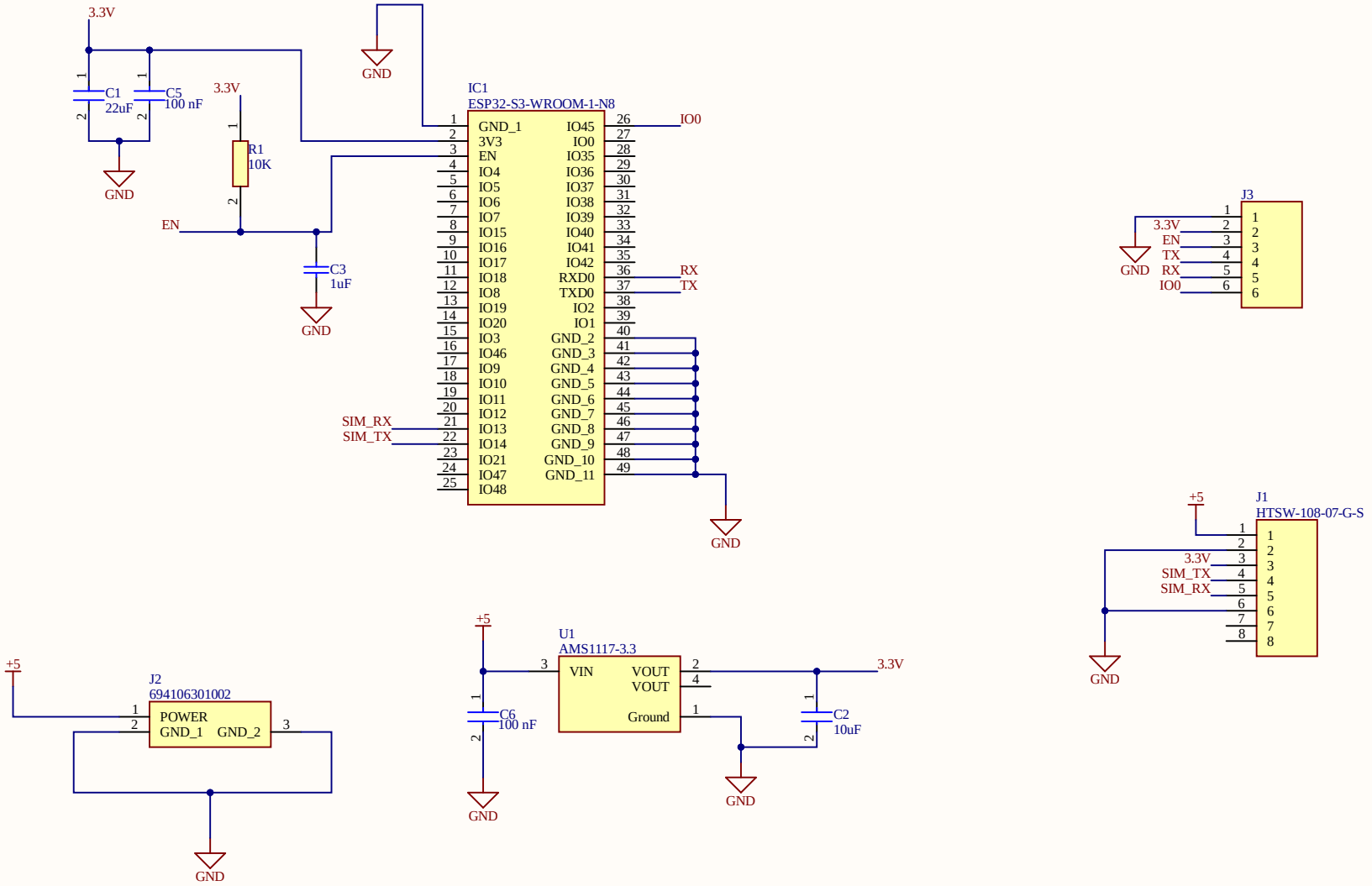

Title Outer Node		
Size A4	Number 1	Revision
Date: 5/02/2024		Sheet of
File: D:\Academics\..\Sheet1.SchDoc		Drawn By:

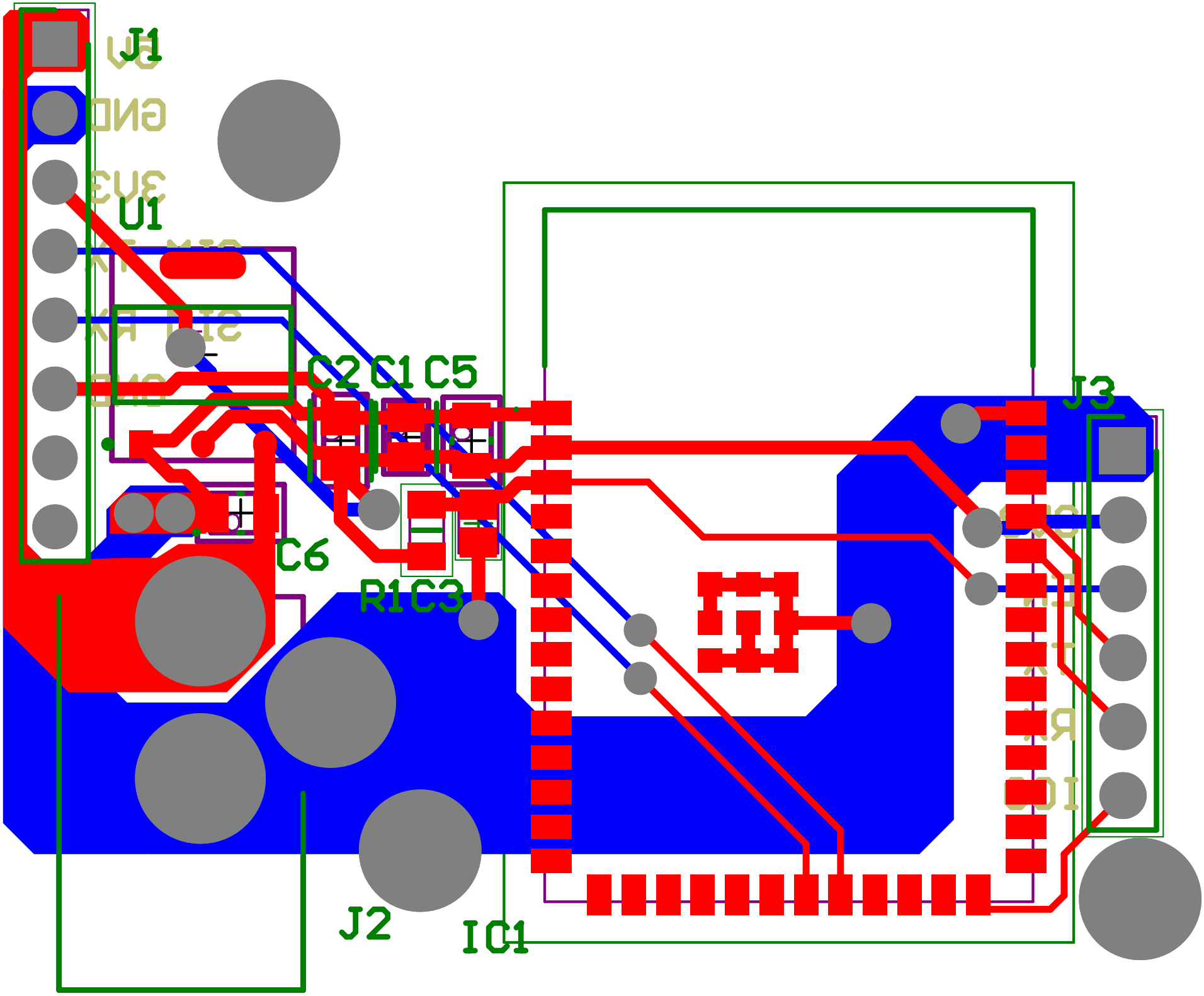
J1
U1
C2
C1
C5
J3
C6
R1
C3
J2
IC1

Comment	Description	Designator	Footprint	LibRef	Quantity
22uF	CL21 Series 0805 22uF 16V ±20% Tolerance X5R Multilayer Ceramic Chip Capacitor	C1	FP-CL21-IPC_C	CMP-13271-002990-1	1
10uF	CL21 Series 0805 10uF 16V ±10% Tolerance X5R Multilayer Ceramic Chip Capacitor	C2	FP-CL21-IPC_B	CMP-2000-06102-2	1
1uF		C3	CAPC2013X140X50LL20T25	CMP-2007-04674-1	1
CC0805KRX7R7BB104	CAP CER 0.1UF 16V X7R 0805	C5, C6	FP-CC0805-0_85-MFG	CMP-1036-04402-6	2
ESP32-S3-WROOM-1-N8	Integrated Circuit	IC1	ESP32S3WROOM1N8R2	ESP32-S3-WROOM-1-N8	1
HTSW-108-07-G-S	Connector	J1	HDRV8W64P0X254_1X8_2032X248X838P	HTSW-108-07-G-S	1
694106301002	Connector	J2	694106301002_1	694106301002	1
22-28-4060	Connector	J3	HDRV6W66P0X254_1X6_1524X249X838P	22-28-4060	1
10K	Resistor	R1	RESC2012X60N	CMP0805AFX-1002ELF	1
AMS1117-3.3	LDO Voltage Regulators 1A, 3.3V	U1	FP-AMS1117-IPC_C	CMP-209535-000001-1	1